ORDER NO. SD7801-1311

Service Manual

SL-1301

QUARTZ

Direct Drive Automatic Turnteble System

SL-1301 (M), (MC)

- The model SL-1301 (M) is available in America only.
- The model SL-1301 (MC) is available in Canada only.

SPECIFICATIONS

Specifications are subject to change without notice for further improvement.

General

Power supply:	AC 120 V, 50 or 60 Hz
Power consumption:	9.5 W
Dimensions: (H x W x D)	12.5 x 45.3 x 36.9 cm 4-15/16 x 17-12/16 x 14-9/16 (inches)
Weight:	9.3 kg (20 lb.)

Turntable section

Type:	Automatic turntable, Auto start, Auto return, Auto stop, Memorepeat play and Manual play
Drive method:	Direct drive
Motor:	Brushless DC motor
Drive control method:	Quartz-phase-locked control
Turntable platter:	Aluminum die-cast Diameter 33 cm (13 inches) Weight 2.2 kg (4.8 lb.) Moment of inertia 310 kg·cm^2 (106 lb·in^2)
Turntable speeds:	33-1/3 rpm and 45 rpm
Starting torque:	1 kg·cm (0.9 lb·in)
Braking system:	Electronic brake
Speed fluctuation due to load torque:	0% within 0.9 kg·cm (0.8 lb·in)
Speed drift:	Within ±0.002%
Wow and flutter:	0.025% WRMS (JIS C5521) ±0.035% peak (IEC 98A Weighted)
Rumble:	−73 dB (IEC 98A Weighted) −50 dB (IEC 98A Unweighted)

Tonearm section

Type:	Universal tonearm Gimbal suspension "S" shaped tubular arm Static balanced type
Effective length:	230 mm (9-1/16 inches)
Overhang:	15 mm
Tracking error angle:	+3° at the outer groove of 30 cm (12") record +1° at the inner groove of 30 cm (12") record
Offset angle:	21.5°
Friction:	Less than 7 mg (lateral, vertical)
Effective mass:	22 g (with 6 g cartridge weight, 1.75 g stylus pressure)
Stylus pressure adjustment range:	0 - 3 g
Applicable cartridge weight range:	5 - 11 g
Headshell weight:	9.5 g

(Weights and dimensions shown are approximate.)

Technics by Panasonic

Panasonic Company
Division of Matsushita Electric
Corporation of America
One Panasonic Way, Secaucus,
New Jersey 07094

Matsushita Electric of Hawaii, Inc.
320 Waiakamilo Road, Honolulu,
Hawaii 96817

Matsushita Electric of Canada Ltd.
40 Ronson Drive, Rexdale,
Ontario, Canada M9W 1B5

PARTS IDENTIFICATION

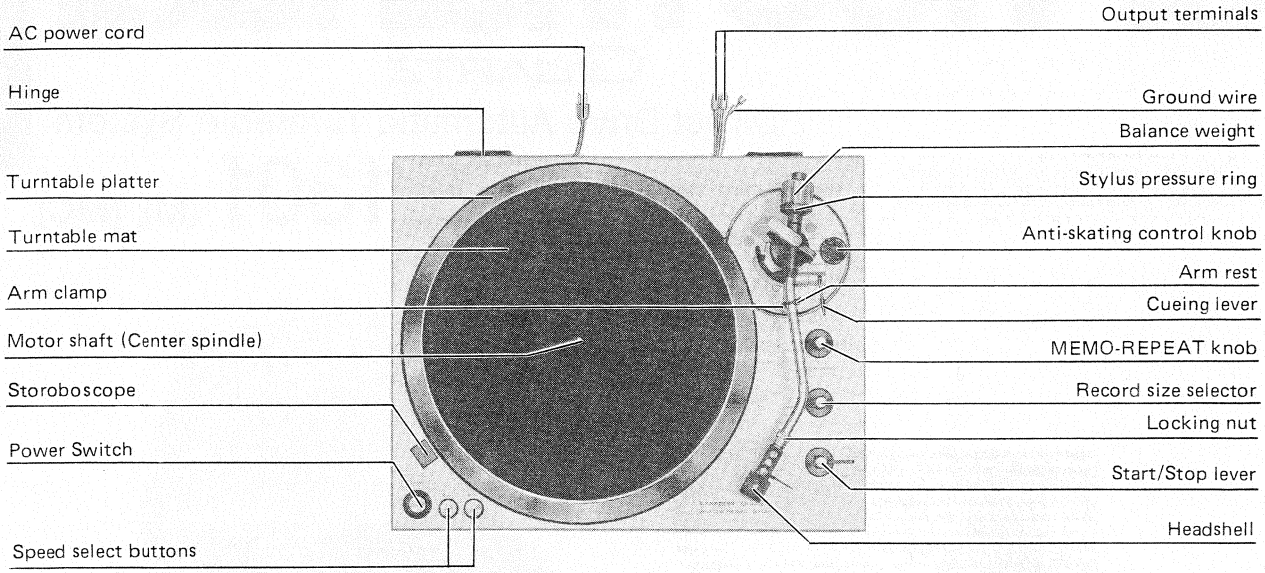

Fig. 1

FEATURES

Three kinds of high integration IC's.
In high accuracy quartz control, advanced electronic circuit technique and IC formation technique are required.
Technics employs the three kinds of high density IC, i.e., IC for frequency divider (DN860) adpoting I^2L and ECL, IC for phase and speed control (AN660), and IC for driving (AN640), and thus has produced a high accuracy quartz-locked turntable with a less than ±0.002% speed drift. (In conditions for normal use in which the temperature is stable, the drift is only approximately ±0.00001%)

Double isolator with particular emphasis on prevention of acoustic feedback.
Rotational accuracy may be said to have reached the ultimate with the superior quartz control system. In order to maximize such high performance, the double isolator (double-isolated vibration-damping rnechanism), unique in Technics has been employed, while the turntable and tonearm are installed on a base weighted by the integrated construction of the main base and bottom cover, with the entire base floating in stable equilibrium with respect to the main turntable base through special isolators. Additionally, the main turntable base is also provided with an isolator superior in vibration damping characteristics. The combined effect obtained from the two kinds of isolators results in extremely superior vibration cut-off and absorption characteristics against external vibrations and local resonance from the direct sound pressure of the speakers, the floor etc. giving a marked improvement in prevention of howling.

Automatic turntable system equipped with "memo-repeat" function capable of repeatedly playing a record from one to six times or continuously playing a record repeatedly.
The unit is equipped with a convenient "memo-repeat" function, and you can enjoy manual playing, automatic start, automatic return, automatic stop, and in addition, repeatedly playing a record from one to six times or continuously playing a record repeatedly.

Highly sensitive gimbal suspension system.
With the high precision pivot bearings employed for the horizontal and vertical journals of the tonearm, in concert with the adoption of the gimbal suspension system, a high sensitivity arm of less than 7 mg friction has been attained, thus making it possible to fully display the performance of the high compliance cartridge.

Motor construction unique to Technics in which the motor rotor is integrally connected to the turntable platter.
The large, heavy weight class precision aluminum diecast finished turntable has the remarkable moment of inertia of 310 kg·cm^2.

Precision aluminum diecase cabinet unique to Technics is used.

Superior load fluctuation characteristics.
By using the high precision quartz phase-locked control system and high-torque motor, stable load fluctuation characteristics are obtained, with no speed change even at a stylus pressure of 180 g.

Smooth braking is achieved with the fully electronic system which also makes possible almost instantaneous speed change.

■ DISASSEMBLY INSTRUCTIONS

1. Remove headshell and balance weight.
2. Clamp tone arm to the arm rest.
3. Remove turntable platter.
4. Close dust cover.
5. Turn unit upside down taking special care not to damage or scratch the dust cover.
6. Remove the 4 screws from Insulator. (Fig. 2)
7. Holding the player firmly with both hands, to prevent separation of upper section (turntable base) from lower section (main base), turn it carefully upwards.
8. Remove dust cover.
9. Remove the 4 screws from the panel cover (Fig. 3)
10. Unplug the 3 plug-in connectors. (Fig. 4)
11. To remove the turntable base from the main base bottom section, turn cueing lever upward (ceuing position) and move tone arm towards center of spindle. Top section can be lifted up easily. (Fig. 5)
12. To reassemble, perform steps 1 through 11 in reverse.

Note: The turntable horizontally to the panel face is already adjusted before shipment.
If deviated, correct it by means of the adjust screws using a 5mm box spanner.

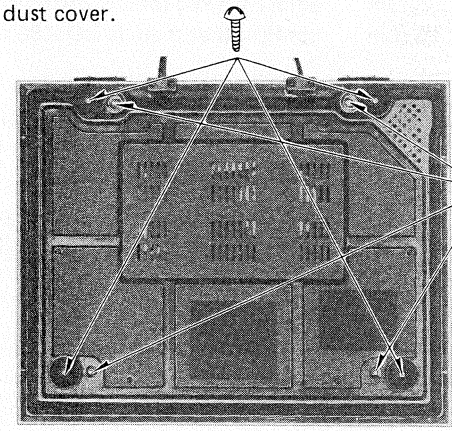

Fig. 2

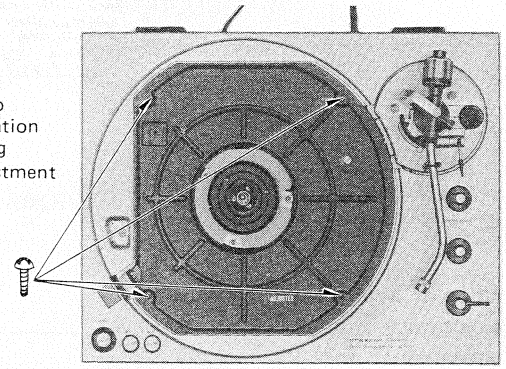

Fig. 3

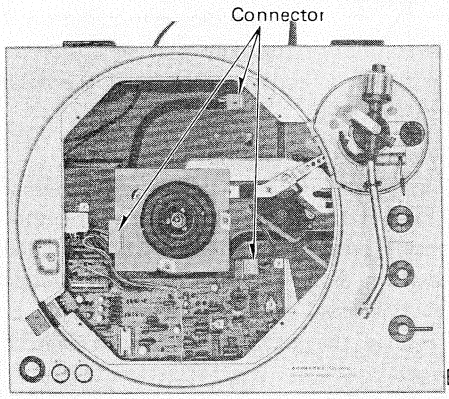

Fig. 4

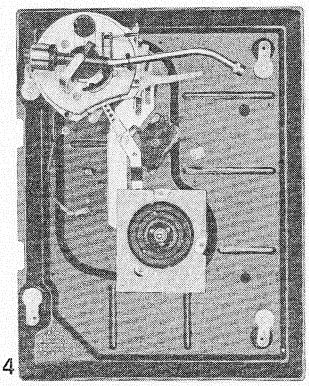

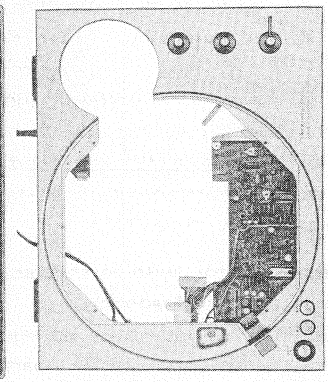

Fig. 5

■ CONNECTOR CONNECTION POINTS FOR INSPECTION

Connect the disassemble main unit and main base as shown in the figure below.

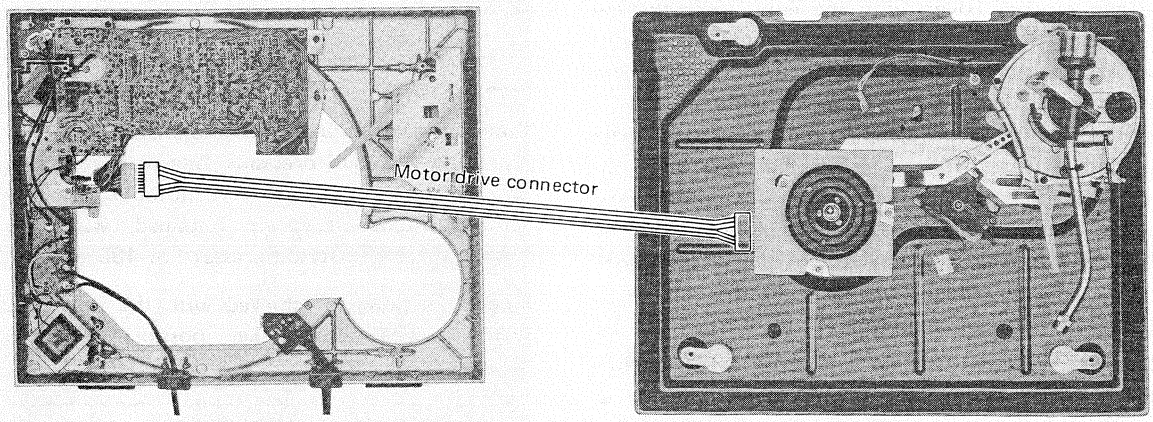

Fig. 6

■ ADJUSTMENTS

Adjustment Points of Electrical System

NOTE: Make the following adjustments after replacing parts such as IC's, transistors, diodes, etc.

	Adjustment	Connection Points	Adjustment Point	Adjustment Method
A	Adjustment of standard voltage (VS)	DC voltmeter or Oscilloscope ⊕ → TP8 ⊖ → GROUND	**VR203**	Turn start switch on to begin turntable rotation. For 33 rpm . . . adjust VR203 for DC 2.10V ±0.05V. For 45 rpm . . . confirm that there is DC 2.80 ~ 2.86V.
B	Adjustment of current source (IR)	DC voltmeter or Oscilloscope ⊕ → TP10 ⊖ → TP17	**VR201**	Turn start switch on to begin turntable rotation. Adjust VR201 for 0V potential difference of TP10 and TP17.
C	Tracking adjustment (TRACKING)	Oscilloscope ⊕ → TP11 ⊖ → GROUND	**VR101**	**TP11 waveform** 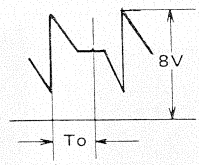 For 33 rpm . . . adjust VR101 for $8 \leq T_0 \leq 8.5$ ms. For 45 rpm . . . confirm that $5.8 \leq T_0 \leq 6.4$ ms.
D	Braking adjustment (BRAKE)	——	**VR202**	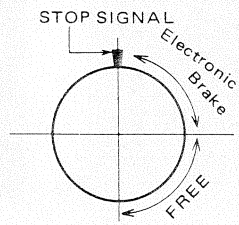 Adjust VR202 for complete stop within 150°~ 240° after stop signal initiated. (Turntable becomes free a few seconds after stop.)

Adjustment for automatic start position
(See Fig. 7)
(Remove the rubber cap.)
In cases where the stylus tip sets down outside of the record
— Move clockwise.
in cases where the stylus tip sets down on the recorded groove
— Move counterclockwise.

Adjustment for automatic return position
(See Fig. 7)
(Remove the turntable mat.)
In cases where the tonearm tends to return before the playing has finished.
— Move counterclockwise.
In cases where the tonearm fails to return after the last groove of the record.
— Move clockwise.

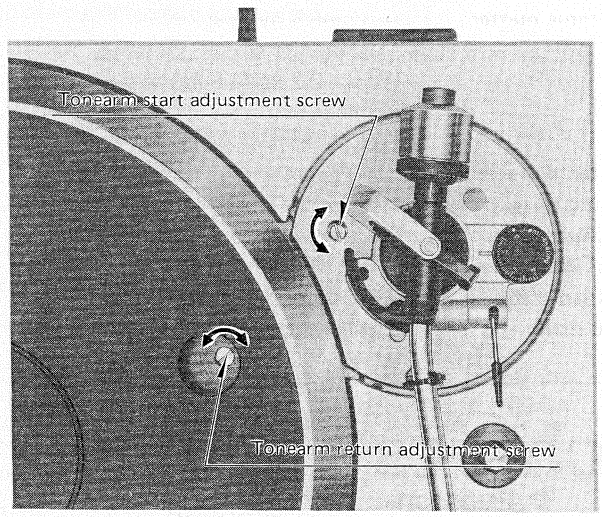

Fig. 7

■ BLOCK DIAGRAM

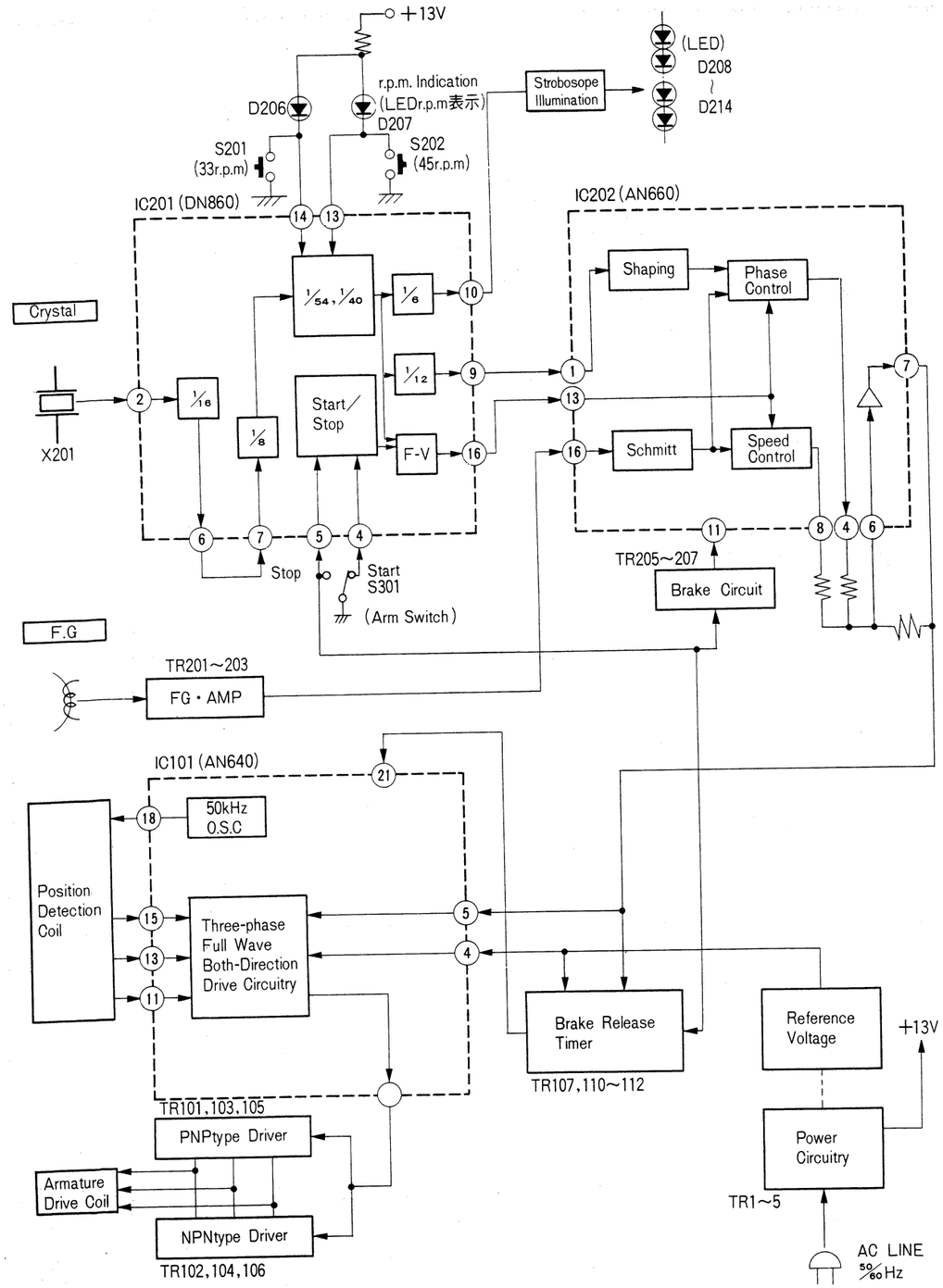

■ TERMINAL GUIDE

TR1, 108, 110, 111	→	2SA564
TR2, 4, 5	→	2SC828A
TR3	→	2SD389
TR101, 103, 105	→	2SB621
TR102, 104, 106	→	2SD592
TR107, 109, 112, 201～203, 205～208	→	2SC828
TR204	→	2SC1328
IC101	→	AN640
IC201	→	DN860
IC202	→	AN660
D1	→	SVDMI 152
D2	→	SVDMI 152R
D3, 101, 203, 204	→	MA150
D4, 205	→	MA1051A
D201	→	MA26T0-A
D202	→	MA1091A
D206～214	→	SVDSR105C

●トランジスタ、ICの立体図

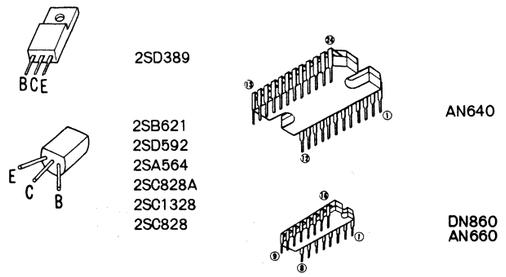

Reference voltage of each pin of IC101

	Start	Stop		Start	Stop		Start	Stop
①②③	0.8V	0.1V	⑩	14.5V	15.2V	⑰	15.5V	15.5V
④	5.8V	6.1V	⑪⑬⑮	20ms 15.6V	Same as at left	⑱	20ms 20V	Same as at left
⑤	5.9V	10.5V				⑲	20.6V	20.6V
⑥	4.7V	2.2V	⑫	14.9V	15V	⑳	15.3V	1.4V
⑦	4.9V	4.9V				㉑	20.5V	16.4V
⑧	20.5V	20.5V	⑭	14.9V	15V	㉒㉓㉔	20V	20V
⑨	5V	0.2V	⑯	0V	0V			

Reference voltage of each pin of IC201

	Start	Stop		Start	Stop		Start	Stop
①	9.4V	9.4V	⑦	3.8μs 4.5V	Same as at left	⑪	0V	0V
②	0.24μs 1.8V	Same as at left				⑫	6V	6V
③	0.24μs 0.9V	Same as at left	⑧	20ms 8V	0V	⑬	3.5V	Same as at left
						⑭	0.2V	0.2V
④	0V	3.2V	⑨	20ms 4.2V	4.3V	⑮	7V	Same as at left
⑤	2.0V	0V						
⑥	3.8μs 4.2V	Same as at left	⑩	10ms 1V	Same as at left	⑯	20ms 7V	0V

Reference voltage of each pin of IC202

	Start	Stop		Start	Stop		Start	Stop
①	20ms 4.6V	0V	⑥	6.3V	6.3V	⑫	2.1V	2.7V
			⑦	5.8V	10.5V	⑬	2.1V	2.7V
②	Same at TP18	0V	⑧	6.3V	5.0V	⑭	20ms 8V	7.5V
③	20ms 4.8V	6.1V	⑨	20ms 6.2V	7.1V			
			⑩	0V	0V	⑮	11.7V	11.7V
④	6.6V	6.2V	⑪	20ms 7V	7.5V	⑯	20ms 6.2V	5.5V
⑤	11.7V	11.7V						

Schematic Diagram

(This schematic diagram may be modified at any time with the development of new technology.)

..... Voltage at rotate.
( ) ..... Voltage at stop.

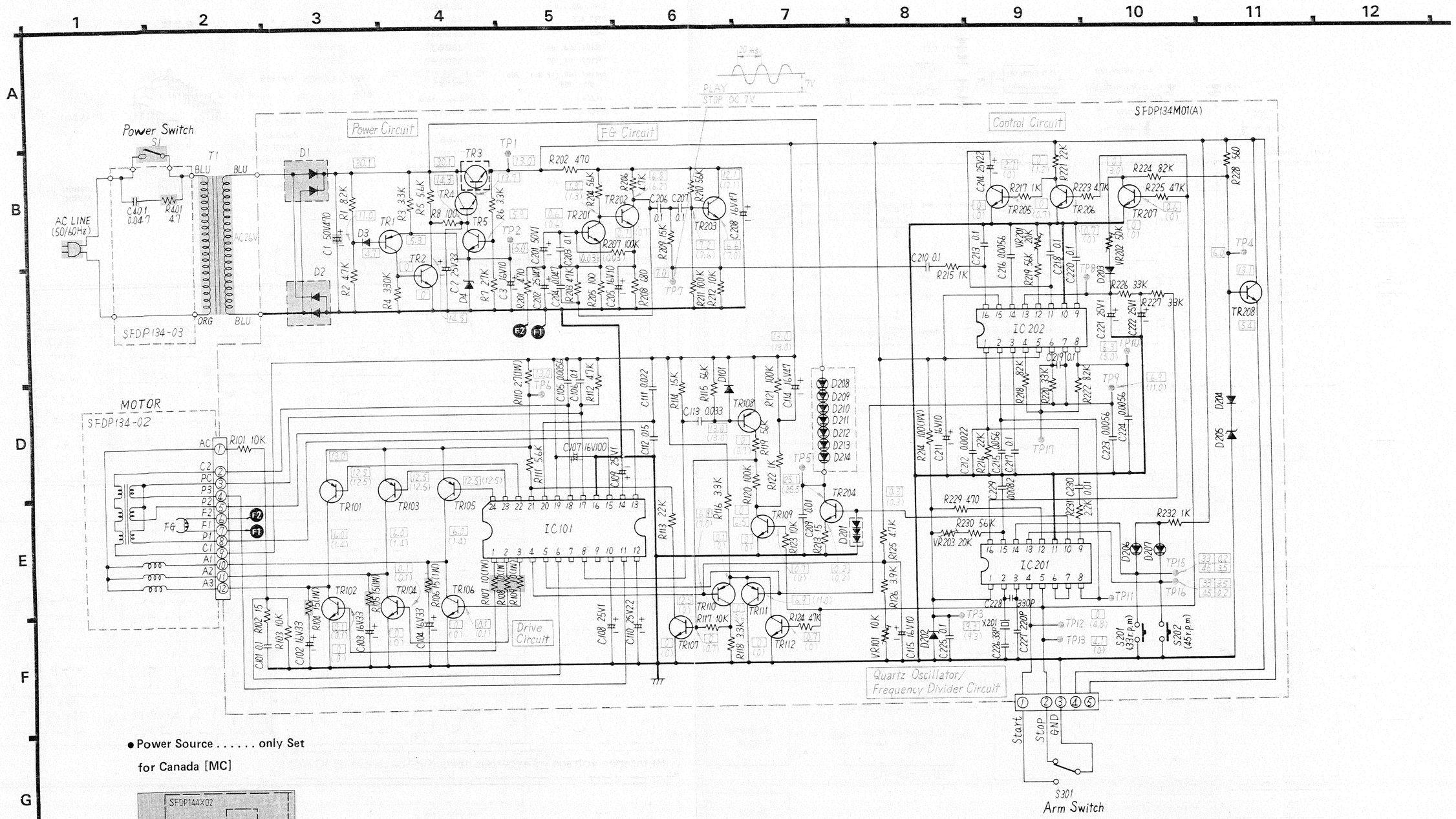

● Power Source ..... only Set for Canada [MC]

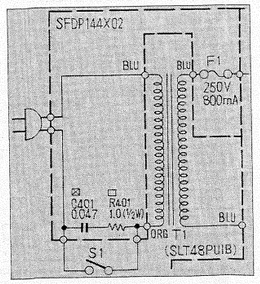

Notes:

1. **S1:** Power switch in **"off"** position.
2. **S201:** Speed select switch (33 r.p.m.)
3. **S202:** Speed select switch (45 r.p.m.)
4. **S301:** Arm switch in **"off"** position.
5. The voltage value entered are the values measured from the chassis with a standard tester that has an internal resistance of 100KΩ/V.

IMPORTANT SAFETY NOTICE

THE SHADED AREA ON THIS SCHEMATIC DIAGRAM INCORPORATES SPECIAL FEATURES IMPORTANT FOR SAFETY.
WHEN SERVICING IT IS ESSENTIAL THAT ONLY MANUFACTUR'S SPECIFIED PARTS BE USED FOR THE CRITICAL COMPONENTS IN THE SHADED AREAS OF THE SCHEMATIC.

Printed Circuit Board

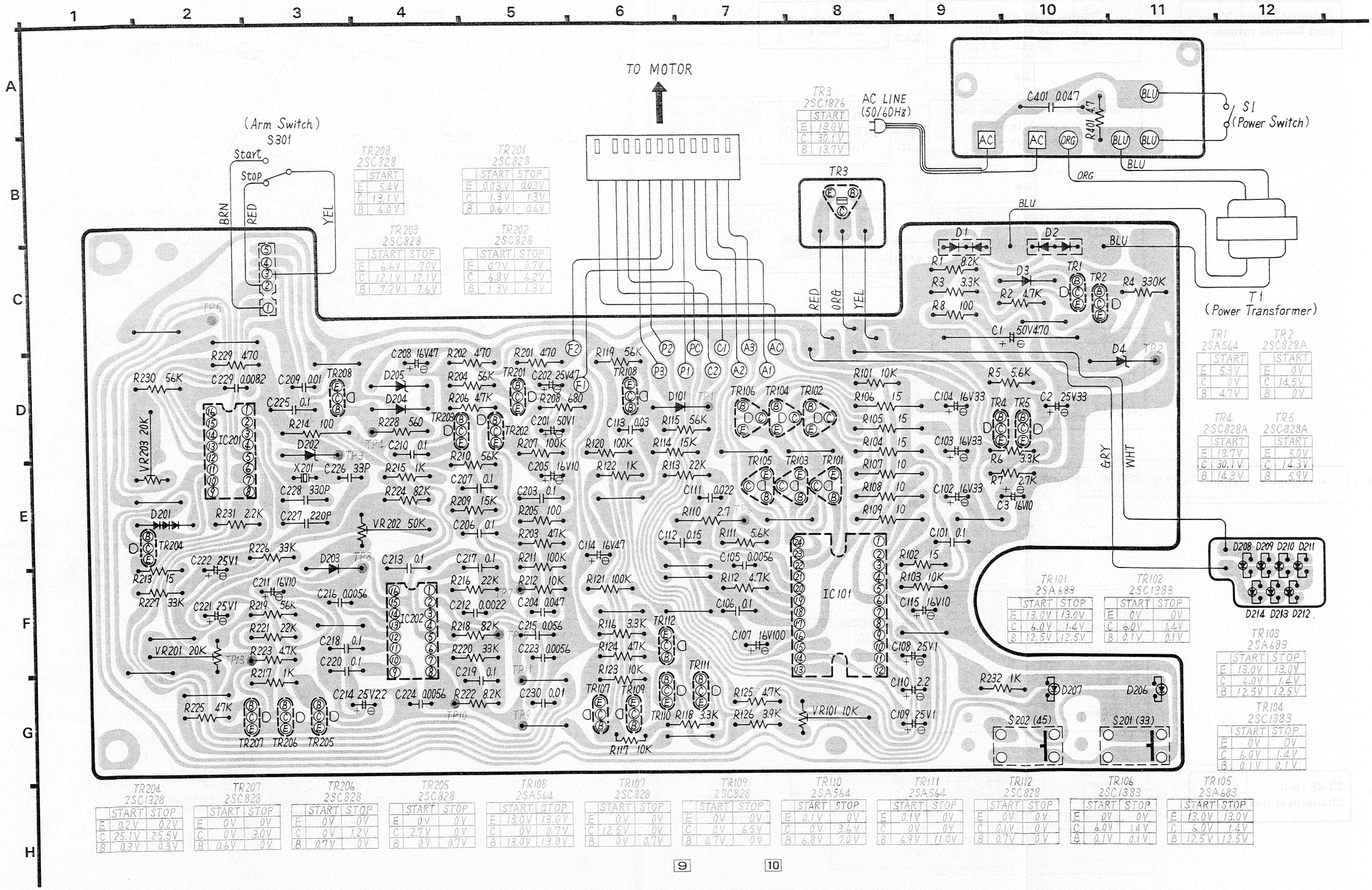

■ TROUBLE SHOOTING

(A) Automatic start, Manual start Neither rotates

→ Power circuitry check
TP1 – 13V (12 ~ 14V)
TP2 – 5V (4.6 ~ 5.4V)
→ BAD → TR1, 2, 3, 4, 5 / D1, 2, 3, 4

↓ OK

Brake release timer circuitry check
TR109 – Start – 19.5V / Stop – 0V
(collector voltage)
→ BAD → TR107, 108, 109 / TR110, 111, 112 / D101

↓ OK

Drive circuitry check
1) IC101 voltage
2) TR101 (TR103, 105)
Collector voltage – Start – 10V / Stop – 2V
→ BAD → IC101 / TR101, 102, 103 / 104, 105, 106

↓ OK

Start/Stop circuitry check
(While starting and stopping with S301)
1) TP12 – Start – 0V / Stop – 4.8V
2) TP13 – Start – 4.1V / Stop – 0V
→ BAD → S301 (Arm switch) / IC201

(B) Runaway operation

→ FG circuitry check
T – 33 rpm – 20ms / 45 rpm – 15ms
TP7 – Start → / Stop – DC7V
→ BAD → TR201, 202, 203

↓ OK

Control circuitry check
1) IC202 voltage
2) TR205, 206, 207 collector voltage
TR205 – Start – 2.7V / Stop – 0V
TR206 – Start – 0V / Stop – 1.2V
TR207 – Start – 0V / Stop – 3.0V
→ BAD → IC202 / TR205, 206, 207 / D203

(C) 33-45 rpm Changeover malfunction

→ Speed-set circuitry check IC201 ⑬
⑭ pin voltage
⑬ – 33rpm – 3.5V / 45rpm – 0.2V
⑭ – 33rpm – 0.2V / 45rpm – 3.5V
→ BAD → IC201 / S201, 202

■ EXPLODED VIEW

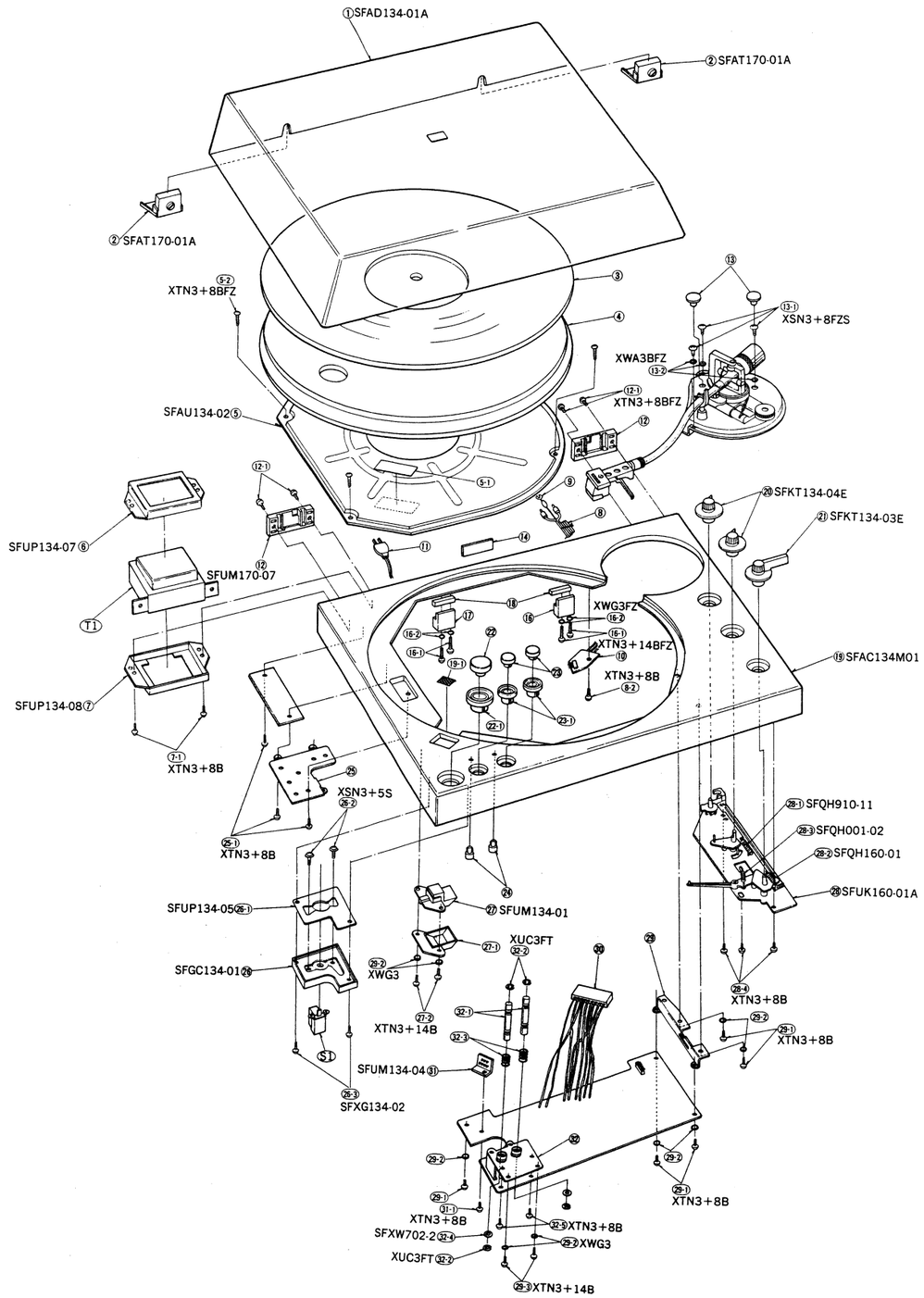

■ EXPLODED VIEW

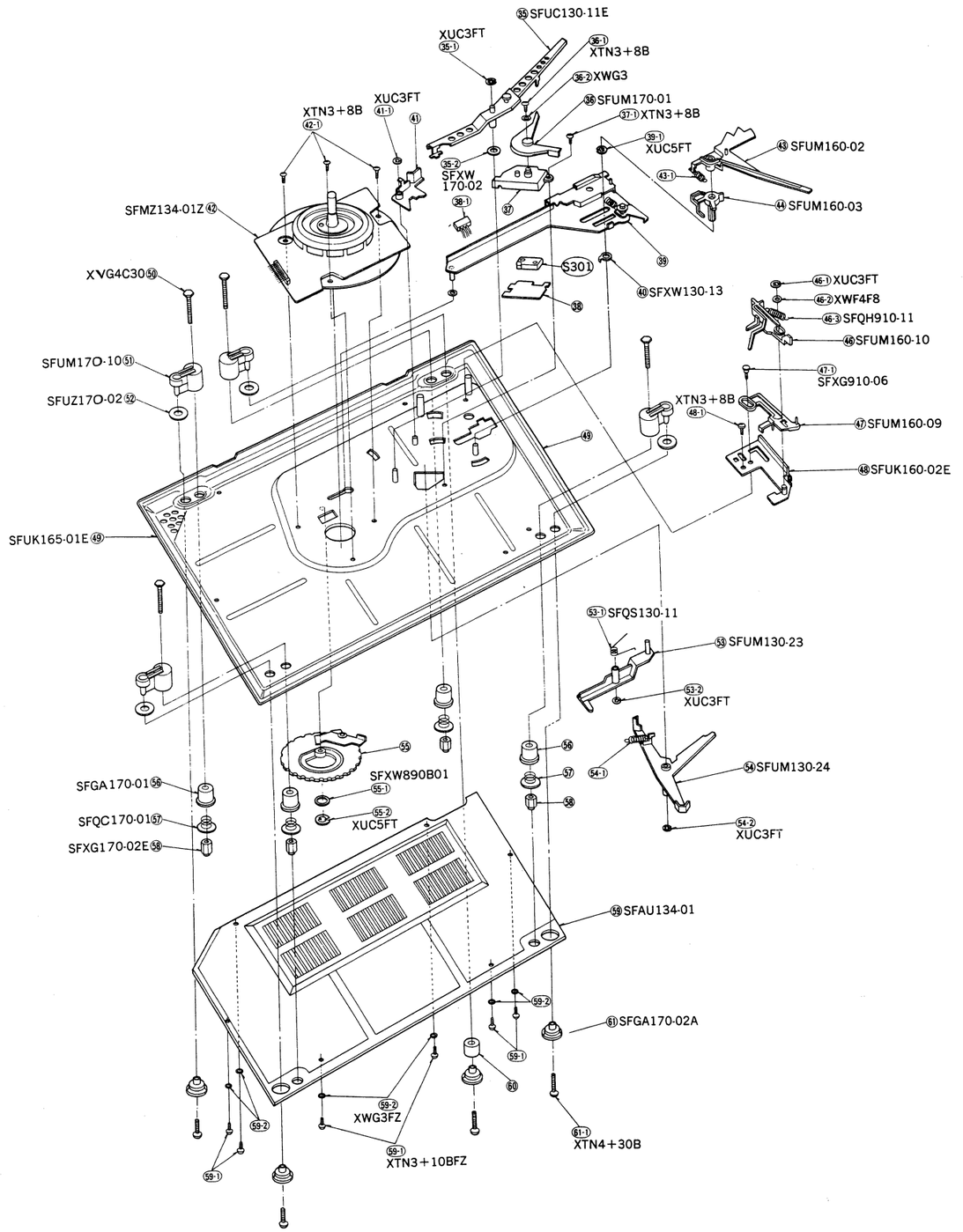

■ EXPLODED VIEW

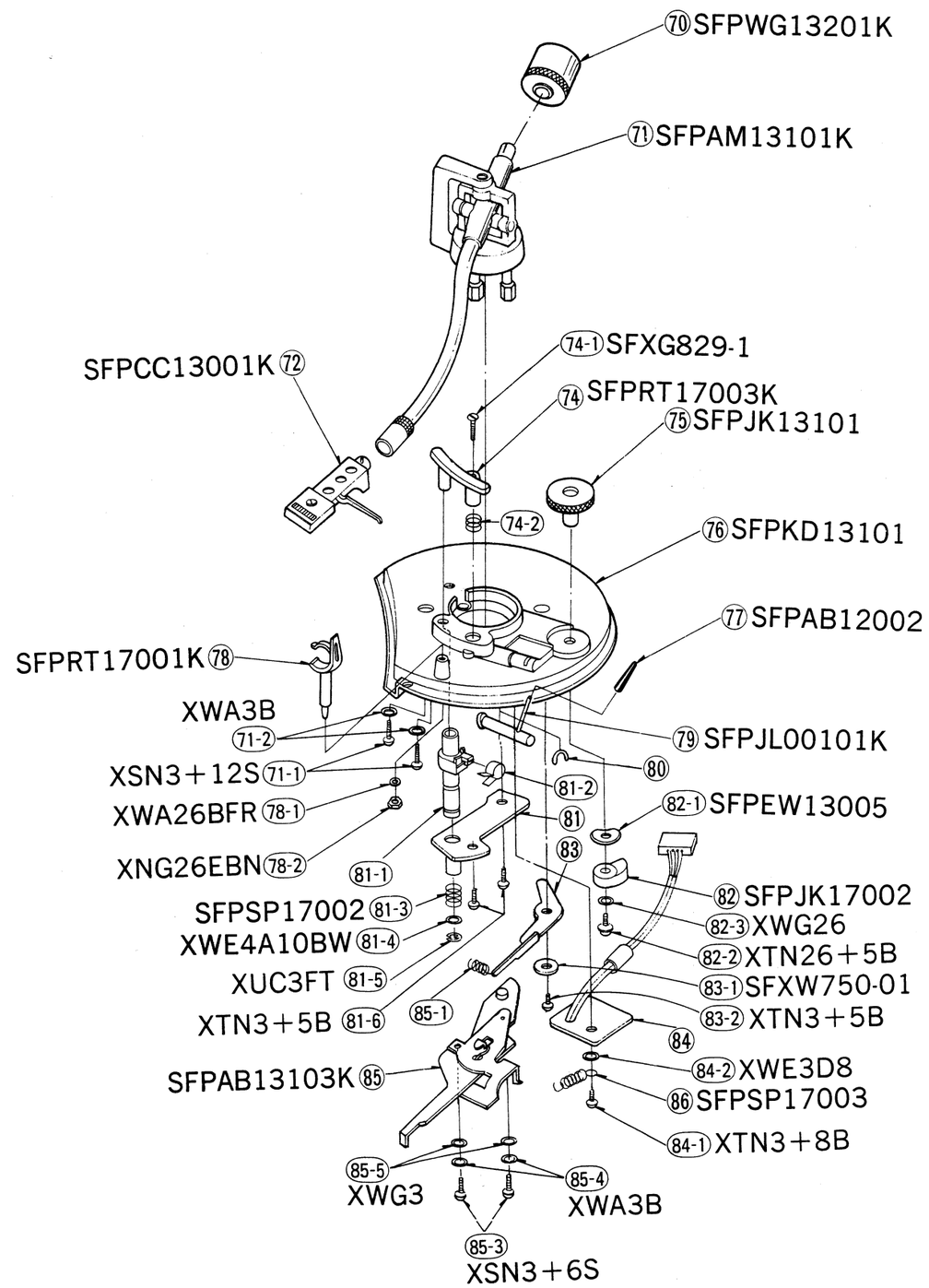

■ REPLACEMENT PARTS LIST

Important Safety Notice

Components identified by shaded area have special characteristics important for safety. When replacing any of these components use only manufacturer's specified parts.

NOTE: 1. Part numbers are indicated on most mechanical parts.
Please use this part number for parts orders.
2. SL-1301 (M) ⟶ [M] SL-1301 (MC) ⟶ [M]

Ref. No.	Part No.	Part Name & Description	Per Set	Remarks
		INTEGRATED CIRCUITS		
IC101	AN640	Drive Circuit	1	
IC201	DN860	Frequency Divider Circuit	1	
IC202	AN660	Control Circuit	1	
		TRANSISTORS		
TR1	**2SA666AI-R**	Transistor (Use in ranks Q or R or S)	1	
TR2	**2SC1328-T**	Transistor	1	
TR3	**2SD389A-Q**	Transistor	1	
TR4, 5	**2SC1328-T**	Transistor	2	
TR101	**2SA752-Q**	Transistor (Use in pair ranks Q or R or S)	1	
TR102	**2SC1384A-Q**	Transistor (Use in pair ranks Q or R or S)	1	
TR103	**2SA752-Q**	Transistor (Use in pair ranks Q or R or S)	1	
TR104	**2SC1384A-Q**	Transistor (Use in pair ranks Q or R or S)	1	
TR105	**2SA752-Q**	Transistor (Use in pair ranks Q or R or S)	1	
TR106	**2SC1384A-Q**	Transistor (Use in pair ranks Q or R or S)	1	
TR107	**2SC1328-T**	Transistor	1	
TR108	**2SA666AI-R**	Transistor (Use in ranks Q or R or S)	1	
TR109	**2SC1328-T**	Transistor	1	
TR110, 111	**2SA666AI-R**	Transistor (Use in ranks Q or R or S)	2	
TR112, 201, 202, 203, 204, 205 206, 207, 208	**2SC1328-T**	Transistor	9	
		DIODES		
D1	**RVD10DC2**	Rectifier	1	
D2	**RVD10DC2R**	Rectifier	1	
D3, 101, 203, 204	MA150	Diode	4	
D4, 205	MA1051A	5.1V Zener, Voltage Stabilizer	2	○
D201	MA26TO-A	Diode	1	
D202	MA1091A	9.1V Zener, Voltage Stabilizer	1	○
D206, 207	SVDSR105C	Light Emitting Diode (r.p.m)	2	
D208, 209, 210, 211, 212, 213, 214	SVDSR105C	Light Emitting Diode (pitch)	7	
		CRYSTAL		
X201	SVQU306115	4.19328MHz Oscillater	1	
		TRANSFORMER		
T1	SLT48PU1B	Power Transformer	1	○
		SWITCHES		
S1	ESB70124T	Power Switch	1	○
S201, 202	EVQP4R04K	Speed Selector Switch	2	
S301	EVQP4R04K	Start-Stop Switch	1	
		FUSE		
F1 [MC only]	XBA2F08NU100	0.8A (Fuse)	1	○

Ref. No.	Part No.	Part Name & Description	Per Set	Remarks
		RESISTORS		
R1	**ERD25TJ822**	Carbon, 8.2kΩ, 1/4W, ± 5%	1	
R2	**ERD25TJ472**	Carbon, 4.7kΩ, 1/4W, ± 5%	1	
R3	**ERD25TJ332**	Carbon, 3.3kΩ, 1/4W, ± 5%	1	
R4	**ERD25TJ334**	Carbon, 330kΩ, 1/4W, ± 5%	1	
R5	**ERD25TJ562**	Carbon, 5.6kΩ, 1/4W, ± 5%	1	
R6	**ERD25TJ332**	Carbon, 3.3kΩ, 1/4W, ± 5%	1	
R7	**ERD25TJ272**	Carbon, 2.7kΩ, 1/4W, ± 5%	1	
R8	**ERD25TJ101**	Carbon, 100Ω, 1/4W, ± 5%	1	
R101	**ERD25TJ103**	Carbon, 10kΩ, 1/4W, ± 5%	1	
R102	**ERD25TJ150**	Carbon, 15Ω, 1/4W, ± 5%	1	
R103	**ERD25TJ103**	Carbon, 10kΩ, 1/4W, ± 5%	1	
R104, 105, 106	**ERG1ANJ150**	Metal Film, 15Ω, 1W, ± 5%	3	
R107, 108, 109	**ERG1ANJ100**	Metal Film, 10Ω, 1W, ± 5%	3	
R110	**ERX1ANJ2R7**	Metal Film, 2.7Ω, 1W, ± 5%	1	
R111	**ERD25TJ562**	Carbon, 5.6kΩ, 1/4W, ± 5%	1	
R112	**ERD25TJ472**	Carbon, 4.7kΩ, 1/4W, ± 5%	1	
R113	**ERD25TJ223**	Carbon, 22kΩ, 1/4W, ± 5%	1	
R114	**ERD25TJ153**	Carbon, 15kΩ, 1/4W, ± 5%	1	
R115	**ERD25TJ563**	Carbon, 56kΩ, 1/4W, ± 5%	1	
R116	**ERD25TJ332**	Carbon, 3.3kΩ, 1/4W, ± 5%	1	
R117	**ERD25TJ103**	Carbon, 10kΩ, 1/4W, ± 5%	1	
R118	**ERD25TJ332**	Carbon, 3.3kΩ, 1/4W, ± 5%	1	
R119	**ERD25TJ563**	Carbon, 56kΩ, 1/4W, ± 5%	1	
R120, 121	**ERD25TJ104**	Carbon, 100kΩ, 1/4W, ± 5%	2	
R122	**ERD25TJ102**	Carbon, 1kΩ, 1/4W, ± 5%	1	
R123	**ERD25TJ103**	Carbon, 10kΩ, 1/4W, ± 5%	1	
R124	**ERD25TJ473**	Carbon, 47kΩ, 1/4W, ± 5%	1	
R125	**ERD25TJ472**	Carbon, 4.7kΩ, 1/4W, ± 5%	1	
R126	**ERD25TJ392**	Carbon, 3.9kΩ, 1/4W, ± 5%	1	
R201, 202	**ERD25TJ471**	Carbon, 470Ω, 1/4W, ± 5%	2	
R203	**ERD25TJ473**	Carbon, 47kΩ, 1/4W, ± 5%	1	
R204	**ERD25TJ563**	Carbon, 56kΩ, 1/4W, ± 5%	1	
R205	**ERD25TJ101**	Carbon, 100Ω, 1/4W, ± 5%	1	
R206	**ERD25TJ472**	Carbon, 4.7kΩ, 1/4W, ± 5%	1	
R207	**ERD25TJ104**	Carbon, 100kΩ, 1/4W, ± 5%	1	
R208	**ERD25TJ681**	Carbon, 680Ω, 1/4W, ± 5%	1	
R209	**ERD25TJ153**	Carbon, 15kΩ, 1/4W, ± 5%	1	
R210	**ERD25TJ563**	Carbon, 56kΩ, 1/4W, ± 5%	1	
R211	**ERD25TJ104**	Carbon, 100kΩ, 1/4W, ± 5%	1	
R212	**ERD25TJ103**	Carbon, 10kΩ, 1/4W, ± 5%	1	
R213	**ERD25TJ150**	Carbon, 15Ω, 1/4W, ± 5%	1	
R214	**ERG1AN101**	Metal Film, 100Ω, 1W, ± 5%	1	
R215	**ERD25TJ102**	Carbon, 1kΩ, 1/4W, ± 5%	1	
R216	**ERD25TJ223**	Carbon, 22kΩ, 1/4W, ± 5%	1	
R217	**ERD25TJ102**	Carbon, 1kΩ, 1/4W, ± 5%	1	
R218	**ERD25TJ823**	Carbon, 82kΩ, 1/4W, ± 5%	1	
R219	**ERD25TJ563**	Carbon, 56kΩ, 1/4W, ± 5%	1	
R220	**ERD25TJ333**	Carbon, 33kΩ, 1/4W, ± 5%	1	
R221	**ERD25TJ223**	Carbon, 22kΩ, 1/4W, ± 5%	1	
R222	**ERD25TJ822**	Carbon, 8.2kΩ, 1/4W, ± 5%	1	
R223	**ERD25TJ472**	Carbon, 4.7kΩ, 1/4W, ± 5%	1	
R224	**ERD25TJ823**	Carbon, 82kΩ, 1/4W, ± 5%	1	
R225	**ERD25TJ473**	Carbon, 47kΩ, 1/4W, ± 5%	1	
R226, 227	**ERD25TJ333**	Carbon, 33kΩ, 1/4W, ± 5%	2	
R228	**ERD25TJ561**	Carbon, 560Ω, 1/4W, ± 5%	1	

Ref. No.	Part No.	Part Name & Description	Per Set	Remarks
R229	**ERD25TJ471**	Carbon, 470Ω, 1/4W, ± 5%	1	
R230	**ERD25TJ563**	Carbon, 56kΩ, 1/4W, ± 5%	1	
R231	**ERD25TJ222**	Carbon, 2.2kΩ, 1/4W, ± 5%	1	
R232	**ERD25TJ102**	Carbon, 1kΩ, 1/4W, ± 5%	1	
R401	ERX12ANT1R0	Metallic, 1Ω, 1/2W, ± 5%	1	
		VARIABLE RESISTORS		
VR101	**EVLS3AA00B14**	Period Adjustment	1	
VR201	**EVLS3AA00B24**	IR Adjustment	1	
VR202	**EVLS3AA00B54**	Brake Adjustment	1	
VR203	**EVLS3AA00B24**	VS Adjustment	1	
		CAPACITORS		
C1	**ECEB50V470**	Electrolytic, 470μF, 50V	1	
C2	**ECEA25V33**	Electrolytic, 33μF, 25V	1	
C3	**ECEA16V10**	Electrolytic, 10μF, 16V	1	
C101	ECQM1H104KZ	Polyester, 0.1μF, 50V, ±10%	1	
C102, 103, 104	**ECEA16V33**	Electrolytic, 33μF, 16V	3	
C105	ECQM1H562KZ	Polyester, 0.0056μF, 50V, ±10%	1	
C106	ECQM1H104KZ	Polyester, 0.1μF, 50V, ±10%	1	
C107	**ECEA16Z100**	Electrolytic, 100μF, 16V	1	
C108, 109	ECSF25E1Z	Electrolytic, 1μF, 25V	2	
C110	ECSF25E2R2Z	Electrolytic, 10μF, 16V	1	
C111	ECQM1H223KZ	Polyester, 0.022μF, 50V, ±10%	1	
C112	ECQM1H154KZ	Polyester, 0.15μF, 50V, ±10%	1	
C113	ECQM1H333KZ	Polyester, 0.033μF, 50V, ±10%	1	
C114	**ECEA16V47**	Electrolytic, 47μF, 16V	1	
C115	**ECEA16V10**	Electrolytic, 10μF, 16V	1	
C201	**ECEA50V1**	Electrolytic, 1μF, 50V	1	
C202	**ECEA35V4R7**	Electrolytic, 4.7μF, 35V	1	
C203	ECKD1E104ZFZ	Electrolytic, 0.1μF, 1000V	1	
C204	ECQM1H473KZ	Polyester, 0.047μF, 50V, ±10%	1	
C205	**ECEA16V10**	Electrolytic, 10μF, 16V	1	
C206, 207	ECQM1H104KZ	Polyester, 0.1μF, 50V, ±10%	2	
C208	**ECEA16V47**	Electrolytic, 47μF, 16V	1	
C209	ECQM1H103KZ	Polyester, 0.01μF, 50V, ±10%	1	
C210	ECQM1H104KZ	Polyester, 0.1μF, 50V, ±10%	1	
C211	**ECEA16V10**	Electrolytic, 10μF, 16V	1	
C212	ECQM1H222KZ	Polyester, 0.0022μF, 50V, ±10%	1	
C213	ECKD1E104ZFZ	Ceramic, 0.1μF, 50V, ±10%	1	
C214	ECSF25E2R2Z	Electrolytic, 2.2μF, 25V	1	
C215	ECQM1H563JZ	Polyester, 0.056μF, 50V, ± 5%	1	
C216	ECQM1H562KZ	Polyester, 0.0056μF, 50V, ±10%	1	
C217, 218, 219, 220	ECQM1H104KZ	Polyester, 0.1μF, 50V, ±10%	4	
C221, 222	ECSF25E1Z	Electrolytic, 1μF, 25V	2	
C223, 224	ECQM1H562KZ	Polyester, 0.0056μF, 50V, ±10%	2	
C225	ECKD1E104ZFZ	Electrolytic, 0.1μF, 1000V	1	
C226	ECCD1H330K	Ceramic, 33pF, 50V, ±10%	1	
C227	ECCW1H221K8	Ceramic, 220pF, 50V, ±10%	1	
C228	ECCD1H331K	Ceramic, 330pF, 50V, ±10%	1	
C229	ECQM1H822KZ	Polyester, 0.0082μF, 50V, ±10%	1	
C230	ECQM1H103KZ	Polyester, 0.01μF, 50V, ±10%	1	
C401 [M]	ECQF1A473MD	Polyester, 0.047μF, 125V, ±20%	1	
C401 [MC]	ECQU1A473MC	Polyester, 0.047μF, 125V, ±20%	1	

Ref. No.	Part No.	Part Name & Description	Per Set	Remarks
		CABINET and CHASSIS PARTS		
1	SFAD134-01A	Dust Cover	1	○
2	SFAT170-01A	Hinge Ass'y	2	
3 [M]	SFTG170M01	Turntable Mat	1	
3 [MC]	SFTG170-01	Turntable Mat	1	
4	SFTE144-01A	Turntable	1	○
5	SFAU134-02	Cover, Panel	1	○
5-1	SFUZ134-02	Seal, Panel Cover	1	○
5-2	XTN3+8BFZ	Screw, Panel Cover	4	
6	SFUP134-07	Bracket (A), Power Transformer	1	○
7	SFUP134-08	Bracket (B), Power Transformer	1	○
7-1	XTN3+8B	Screw, Bracket	2	
8 [M]	SFDH360M01	Phono Cord	1	
8 [MC]	SFDH028-01	Phono Cord	1	
8-2	XTN3+8B	Screw, P.C.B.	1	
9	SFEL028-01E	Ground Wire	1	
10	SFDP170-03	P.C.B., Phono Cord	1	
11	SPT1	AC Cord	1	
12	SFUM170-07	Case, Hinge Ass'y	2	
12-1	XTN3+8BFZ	Screw, Hinge Case	4	
13 [M]	SFGK132M01	Cap, Rubber	2	
13 [MC]	SFGK132-01	Cap, Rubber	2	
13-1	XSN3+8FZS	Screw, Arm Base	3	
13-2	XWA3BFZ	Washer, Arm Base	3	
14 [M]	SFNN134M01	Name Plate	1	*○
14 [MC]	SFNN134C01	Name Plate	1	*○
16	SFUM170-11	Clamper, Phono Cord	1	
16-1	XTN3+14BFZ	Screw, Phono Cord Bracket	4	
16-2	XWG3FZ	Washer, Phono Cord Bracket	4	
17	SFUM170-05	Clamper, AC Cord	1	
18	SFUM170-06	Spacer, Phono-AC Cord	2	
19	SFAC134M01	Cabinet	1	○
19-1	SFUZ134-01	Felt, Cabinet	1	○
20	SFKT134-04E	Knob, Selector Switch	2	○
21	SFKT134-03E	Knob, Start Switch	1	○
22	SFKT134-02	Knob, Power Switch	1	○
22-1	SFUM134-02	Rim, Power Switch Knob	1	○
23	SFKT134-01	Knob, Speed Adjustment	2	○
23-1	SFUM134-05	Rim, Speed Adjustment Knob	2	○
24	SFUM134-07	Cover, LED	2	○
25	SFUP134-03	Heat Sink	1	○
25-1	XTN3+8B	Screw, Heat Sink	2	
26	SFGC134-01	Insulator, Power Switch	1	○
26-1	SFUP134-05	Bracket, Power Switch	1	○
26-2	XSN3+5S	Screw, Power Switch Bracket	2	
26-3	SFXG134-02	Screw, Power Switch Insulator	2	○
27	SFUM134-01	Neon Ass'y	1	○
27-1	SFUM134-06	Cover, Neon Ass'y	1	○
27-2	XTN3+14B	Screw, Neon Cover	2	
28	SFUK160-01A	Operation Plate Ass'y	1	
28-1	SFQH910-11	Spring, Start Lever	1	
28-2	SFQH160-01	Spring, Start Cam	1	
28-3	SFQH001-02	Spring, Cut Lever	1	
28-4	XTN3+8B	Screw, Operation Plate	3	
29	SFUP134-02	Bracket, Drive P.C.B.	1	○

Ref. No.	Part No.	Part Name & Description	Per Set		Remarks
29-1	XTN3+8B	Screw, Drive P.C.B. Bracket	5		
29-2	XWG3	Washer, Drive P.C.B. Bracket	9		
29-3	XTN3+14B	Screw, Switch Holder	2		
30	SFDJ134-01E	Connector, Motor	1		○
31	SFUM134-04	Spacer, L.E.D.	1		
31-1	XTN3+8B	Screw, L.E.D. Spacer	1		
32	SFQA134-01	Holder, Speed Selector Switch	1		○
32-1	SFXJ134-01	Spacer, Speed Selector Switch	2		○
32-2	XUC3FT	Circlip, Spacer	4		
32-3	SFQA134-01	Spring, Spacer	2		
32-4	SFXW702-2	Washer, Spacer	2		
32-5	XTN3+8B	Screw, Switch Holder	2		
35	SFUC130-11E	Actuating Plate Ass'y	1		
35-1	XUC3FT	Circlip, Actuating Plate Ass'y	1		
35-2	SFXW170-02	Washer, Actuating Plate Ass'y	1		
36	SFUM170-01	Lever, Cut	1		
36-1	XTN3+8B	Screw, Cut Lever	1		
36-2	XWG3	Washer, Cut Lever	1		
37	SFUM170-08	Cover, Arm Switch	1		
37-1	XTN3+8B	Screw, Arm Switch Cover	1		
38	SFUP170-06	Base, Arm Switch	1		
38-1	SFDJ134-02E	Connector, 5P	1		○
39	SFUB160-01A	Operating Plate Ass'y	1		
39-1	XUC5FT	Circlip, Operating Plate Ass'y	1		
40	SFXW130-13	Washer, Operating Plate Ass'y	1		
41	SFUM130-16	Support, Switch	1		
41-1	XUC3FT	Circlip, Switch Support	1		
42	SFMZ134-01Z	D.D. Motor Ass'y	1		○
42-1	XTN3+8B	Screw, D.D. Motor Ass'y	3		
43	SFUM160-02	Index Plate Ass'y	1		
43-1	SFQH160-02	Spring, Index Plate Ass'y	1		
44	SFUM160-03	Support, Index Plate Ass'y	1		
46	SFUM160-10	Plate, Sensing	1		
46-1	XUC3FT	Circlip, Sensing Plate	1		
46-2	XWF4F8	Washer, Sensing Plate	1		
46-3	SFQH910-11	Spring, Sensing Plate	1		
47	SFUM160-09	Support, Start Plate	1		
47-1	SFXG910-06	Screw, Start Support	1		
48	SFUK160-02E	Plate, Auxiliary Start	1		
48-1	XTN3+8B	Screw, Auxiliary Start Plate	1		
49	SFUK165-01E	Base, Main	1		
50	XVG4C30	Screw, Insulator (A)	4		
51	SFUM170-10	Insulator (A)	4		
52	SFUZ170-02	Felt, Insulator (A)	4		
53	SFUM130-23	Plate, Gear Set	1		
53-1	SFQS130-11	Spring, Gear Set Plate	1		
53-2	XUC3FT	Circlip, Gear Set Plate	1		
54	SFUM130-24	Lever, Switch	1		
54-1	SFQH910-05	Spring, Switch Lever	1		
54-2	XUC3FT	Circlip, Switch Lever	1		
55	SFUG130-12A	Main Gear Ass'y	1		
55-1	SFXW890B01	Washer, Main Gear Ass'y	1		
55-2	XUC5FT	Circlip, Main Gear Ass'y	1		
56	SFGA170-01	Rubber, Insulator	4		
57	SFQC170-01	Spring, Insulator	4		

Ref. No.	Part No.	Part Name & Description	Per Set		Remarks
58	SFXG170-02E	Nut, Insulator	4		
59	SFAU134-01	Cover, Bottom	1		○
59-1	XTN3+10BFZ	Screw, Bottom Cover	6		
59-2	XWG3FZ	Washer, Bottom Cover	6		
60	SFGZ170-03	Rubber	1		
61	SFGA170-02A	Insulator (B)	4		
61-1	XTN4+30B	Screw, Insulator	4		
TONE ARM and ARM BASE					
70	SFPWG13201K	Balance Weight Ass'y	1		
71	SFPAM13101K	Tone Arm Ass'y	1		○
71-1	XSN3+12S	Screw, Tone Arm Ass'y	2		
71-2	XWA3B	Washer, Tone Arm Ass'y	2		
72	SFPCC13001K	Head Shell	1		
74	SFPRT17003K	Lift Ass'y	1		
74-1	SFXG829-1	Screw, Tone Arm Lift Adjustment	1		
74-2	SFQA829-03	Spring, Lift Ass'y	1		
75	SFPJK13101	Knob, Anti-skate Force Control	1		○
76	SFPKD13101	Arm Base	1		○
77	SFPAB12002	Knob, Arm Lift	1		
78	SFPRT17001K	Arm Rest	1		
78-1	XWA26BFR	Washer, Arm Rest	1		
78-2	XNG26EBN	Nut, Arm Rest	1		
79	SFPJL00101K	Cueing Lever Ass'y	1		
80	SFPGM20001	Rubber, Cueing Lever Ass'y	1		
81	SFPAB13101K	Lift Bar Ass'y	1		○
81-1	SFPJL13101K	Lift Bar	1		○
81-2	SFPSP13101	Support, Lift Bar	1		○
81-3	SFPSP17002	Spring, Arm Lift Bar	1		
81-4	XWE4A10BW	Washer, Arm Lift Bar	1		
81-5	XUC3FT	Circlip, Arm Lift Bar	1		
81-6	XTN3+5B	Screw, Arm Lift Bar	2		
82	SFPJK17002	Cam, Anti-skate Force Control	1		
82-1	SFPEW13005	Washer, Anti-skate Force Control	1		
82-2	XTN26+5B	Screw, Anti-skate Force Control	1		
82-3	XWG26	Washer, Anti-skate Force Control	1		
83	SFPSH17001	Support, Anti-skate Force Control	1		
83-1	SFXW750-01	Washer, Support	1		
83-2	XTN3+5B	Screw, Support	1		
84	SFDP134M01E	Phono P.C.B. Ass'y	1		○
84-1	XTN3+8B	Screw	1		
84-2	XWE3D8	Washer	1		
85	SFPAB1[illegible]03K	Base, Arm Lift	1		○
85-1	SFPSP14001	Spring, Anti-skate Force Control	1		
85-3	XSN3+6S	Screw, Arm Lift Base	2		
85-4	XWA3B	Washer, Arm Lift Base	2		
85-5	XWG3	Washer, Arm Lift Base	2		
86	SFPSP17003	Spring	1		
ACCESSORIES					
A1 [M]	SFNU134M01	Instruction Book	1		○
A1 [MC]	SFNU134C01	Instruction Book	1		○
A2	**SFWE154A01**	Adaptor, 45 r.p.m.	1		
A3	SFCZV8800	Screw, Cartridge	2		
A3-1	SFPEV7800	Screw, Cartridge	2		

■ PACKINGS

Ref. No.	Part No.	Part Name & Description	Per Set		Remarks
A3-2	SFYF09A15	Polyethylene Bag	1		
A4	SFKO135M01E	Overhang Gauge	1		
		PACKING PARTS			
P1 [M]	SFHP134M01	Carton	1	○	
P1 [MC]	SFHP134C01	Carton	1	○	
P2	SFHH160-01	Pad, Front	1		
P3	SFHH160-02	Pad, Rear	1		
P4	SFHD134-01	Pad, Turntable	1		
P5	SFHD170-01	Pad, Top	1		
P6	SFHD134-02	Pad, Spacer	1		
P7	SFHD134-01	Cover, Turntable	1		
P8	SFHD001-04	Cover, Motor	1		
P9	SFHS170-01	Spacer, Panel	3		
P10	SFYH60X60	Polyethylene Cover, Dust Cover	1		
P11	SFYH40X45	Polyethylene Cover, Turntable	1		
P12	SFYF60A60	Polyethylene Cover, Player Unit	1		
P13	SFYF15X30	Polyethylene Cover, Cord	1		
P14	SFHS170-02	Spacer, Arm Base	1		

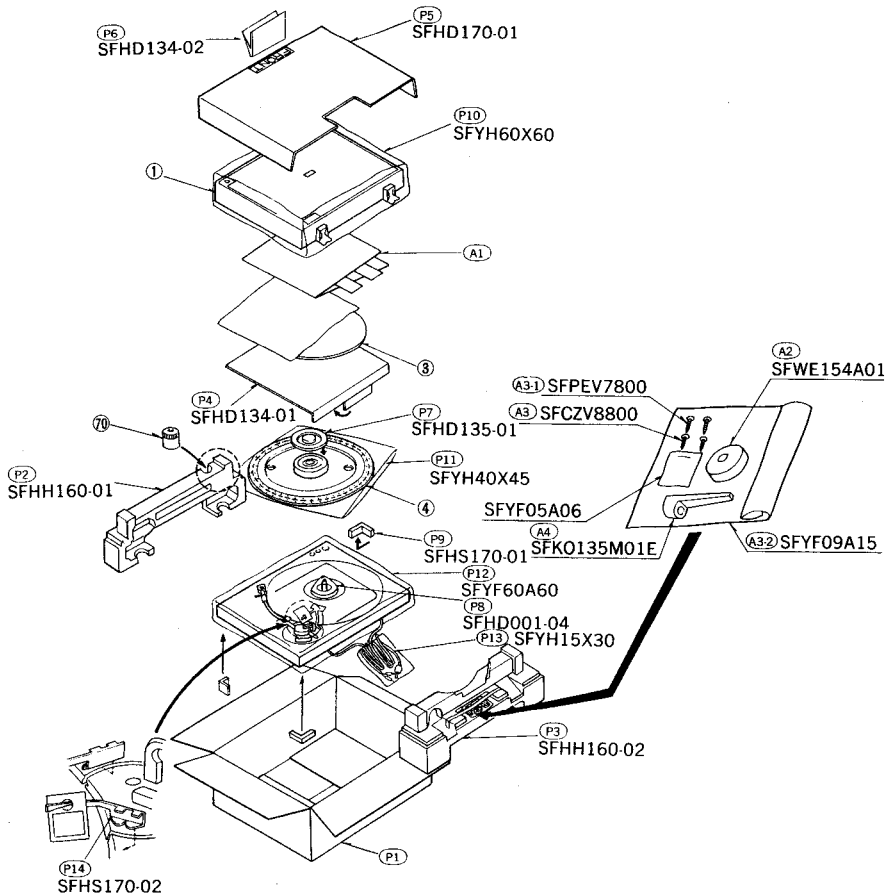

Printed in Japan
7708-3750 A

ORDER NO. SD7803-1337

Service Manual

SL-1311

QUARTZ

Direct Drive Automatic Turntable System

SL-1311 (FEE)

- The model SL-1311 (FEE) is available in European Audio club only.

For additional information, please refer to the service manual for Model No. SL-1301 (M, MC)

Notes: * This service manual includes only the changes of the **SL-1301 (M, MC)** service manual (ORDER NO. SD7801-1311).
* When servicing models **SL-1311 (FEE)**, this service manual and **SL-1301 (M, MC)** (ORDER NO. SD7801-1311) service manual should be used together.

MODIFICATIONS-1

SL-1301 (M, MC)

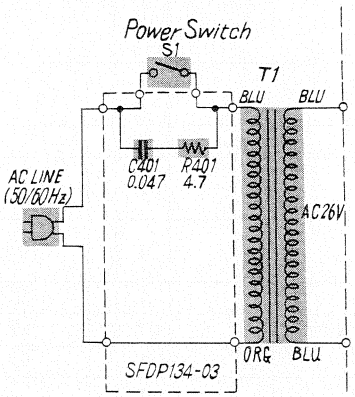

SL-1311 (FEE)

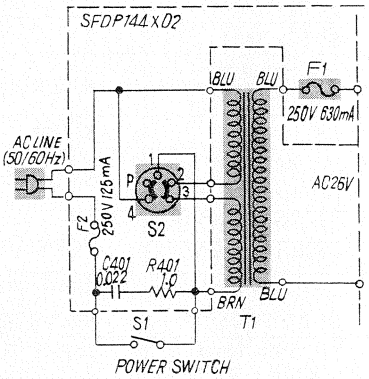

MODIFICATIONS-2

■ PRINTED CIRCUIT BOARD

SL-1301 (M), (MC)

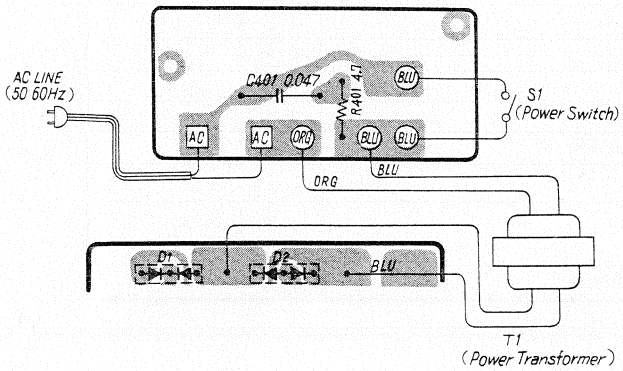

SL-1311 (FEE)

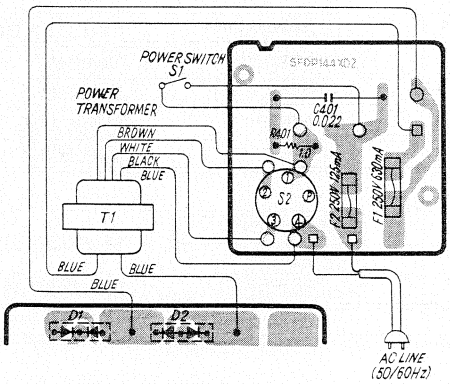

Technics

Panasonic Tokyo
Matsushita Electric Industrial Co., Ltd.
17-15, 6-chome, Shinbashi, Minato-ku, Tokyo 105 Japan

Matsushita Electric Trading Co., Ltd.
P.O. Box 288, Central Osaka Japan

1336

MODIFICATIONS-3

■ REPLACEMENT PARTS LIST

Ref. No.	Change of Part No. SL-1301 (M), (MC)	Change of Part No. SL-1311 (FEE)	Part Name & Description	Per Set		Remarks
TRANSFORMER						
T1	SLT48PUIB	SLT48Q22E	Power Transformer	1		
SWITCHES						
S1	ESB70124T	ESB70125	Power Switch	1		
S2	Addition	SFDSHXW01317	Power Source	1		
FUSES						
F1	Addition	XBA2C06TR0	630mA (Fuse)	1		
F2	Addition	XBA2C012TR0	125mA (Fuse)	1		
RESISTOR						
R401	ERX12ANT1R0	ERX12NJ1RO	Metal Film, 1Ω, 1/2W, ±5%	1		
CAPACITOR						
C401	ECQF1A473MD	ECNC4A223M	Oil Paper, 0.022μF, 400V, ±20%	1		
CABINET and CHASSIS PARTS						
3	SFTG170M01 SFTG170-01	SFTG170-01	Turntable Mat	1		
8	SFDH360M01 SFDH028-01	SFDH028-01	Phono Cord	1		
11	SPT1	SJA89	AC Cord	1		
13	SFGK132M01 SFGK132-01	SFGK133SO1	Cap, Rubber	2		
14	SFNN134M01 SFNN134C01	SFNN137P01	Name Plate	1		*○
19	SFAC134M01	SFAC137P01	Cabinet	1		○
32	SFQA134-01	SFUM134-03	Holder, Speed Selector Switch	1		○
71	SFPAM13101K	SFPAM13102K	Tone Arm Ass'y	1		○
76	SFPKD13101	SFPKD17002	Arm Base	1		
TONE ARM and ARM BASE						
84	SFDP134M01E	SFDP134M04E	Phono P.C.B. Ass'y	1		
87	Addition	EPC74SMED	Cartridge	1		
87-1	Addition	EPS74STED	Stylus	1		
87-2	Addition	SFCZV8801	Screw, Cartridge	2		
ACCESSORIES						
A1	SFNU134M01	SFNU137P01	Instruction Book	1		○
A3	SFCZV8800	Deletion	----------	0		
A3-1	SFPEV7800	Deletion	----------	0		
A5	Addition	SFDK100G	DIN-PIN Adaptor	1		
A6	Addition	QJP0603S	Adaptor, Gimens	1		
PACKING PARTS						
P1	SFHP134M01 SFHP134C01	SFHP137P01	Carton	1		○
P7	SFHD134-01	SFHD135-01	Cover, Turntable	1		

Printed in Japan
7803-250 Ⓐ